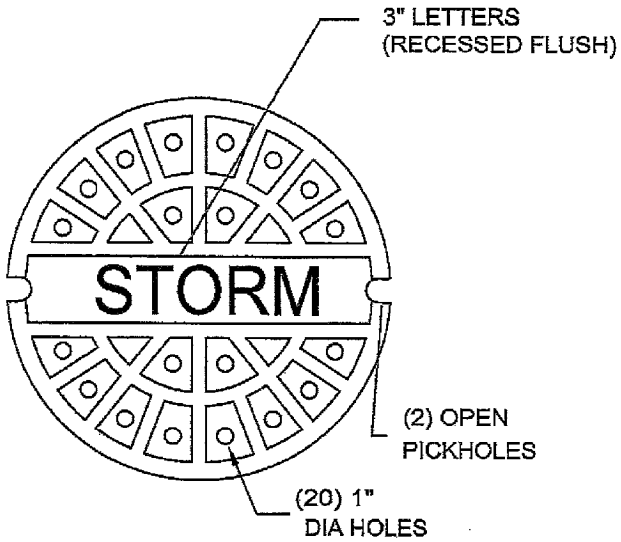

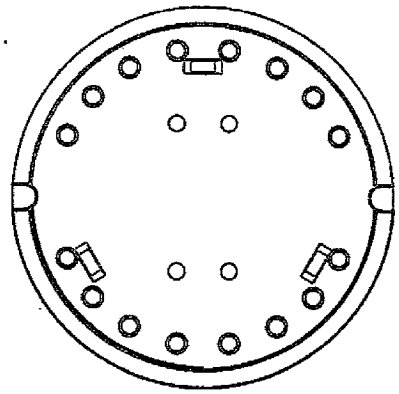

BOTTOM VIEW

THE FRAME SHALL BE SECURELY FASTENED TO THE TOP MANHOLE SECTION BY FOUR 3/4-INCH STAINLESS STEEL CINCH ANCHORS.

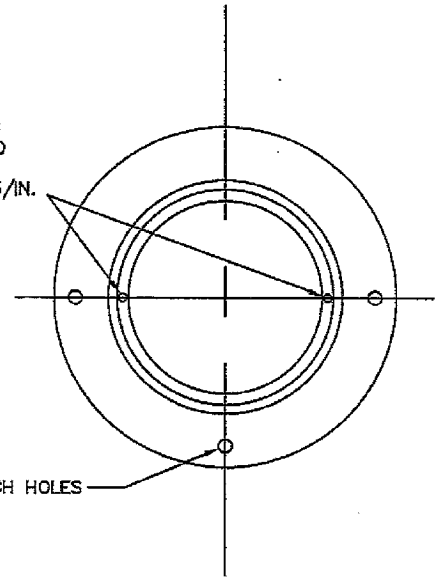

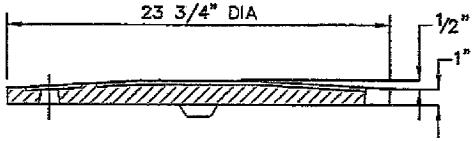

COVER SECTION

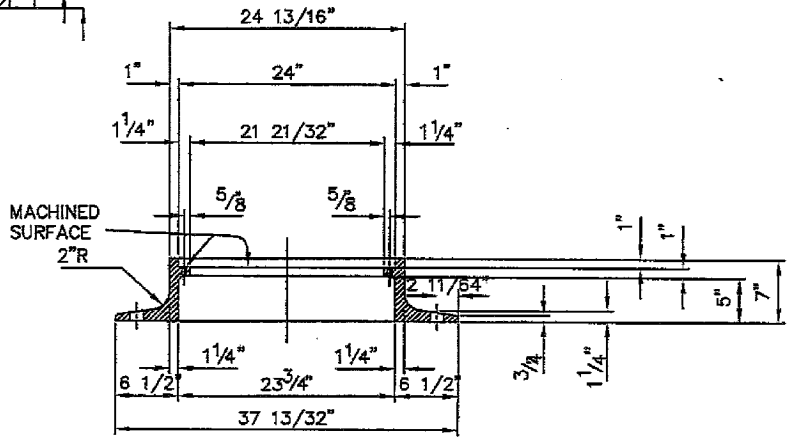

CITY OF CINCINNATI
METROPOLITAN SEWER DISTRICT
STORMWATER MANAGEMENT UTILITY

STANDARD CASTING FOR MANHOLE

NO SCALE

September, 2011

APPROVED

SMU CHIEF ENGINEER

East Jordan 166567 or approved equal

ACC. NO. 120282