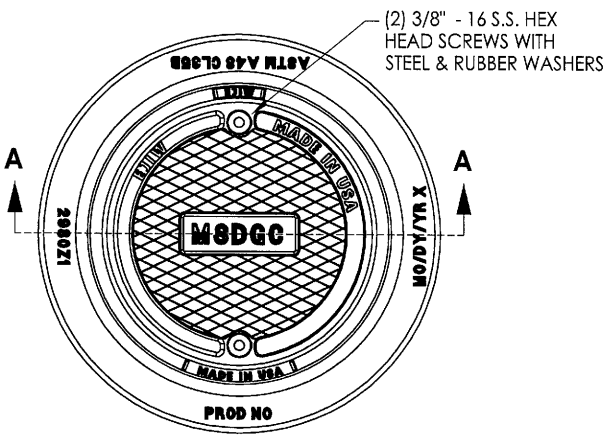

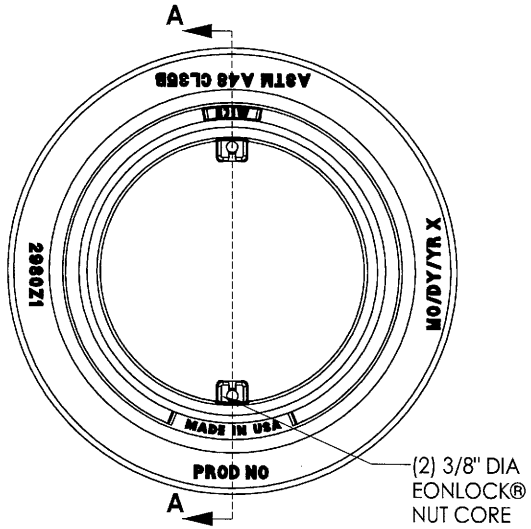

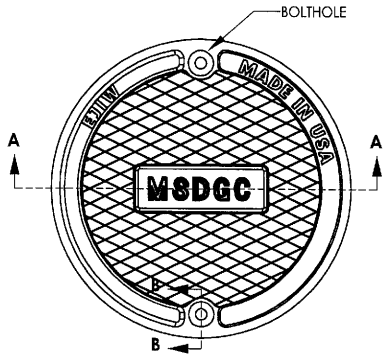

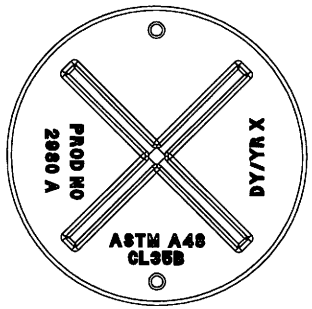

BOTTOM VIEW

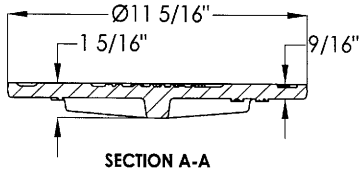

SECTION A-A

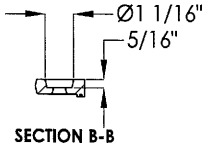

SECTION B-B

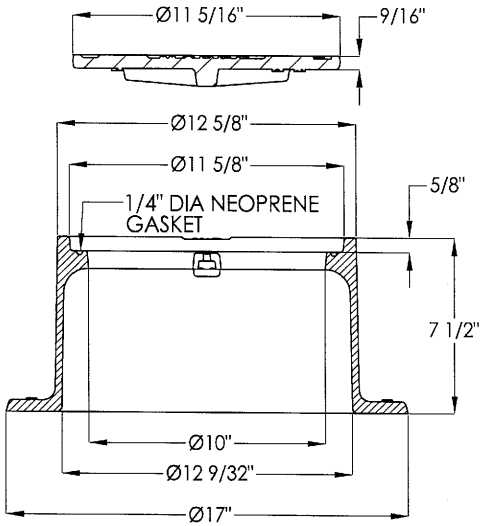

SECTION A-A

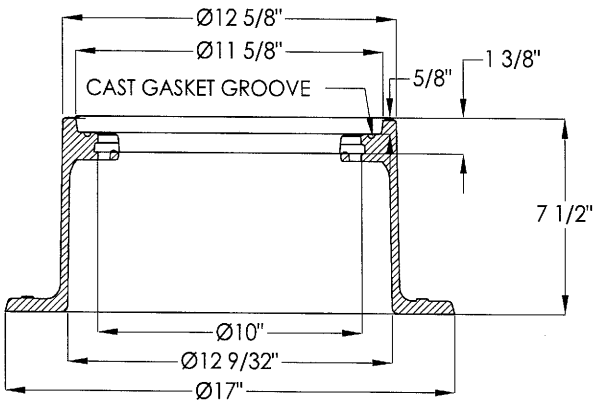

SECTION A-A

FRAME: EAST JORDAN PRODUCT #00298013
2980Z1 BLT1 FRAME, OR EQUAL

COVER: EAST JORDAN PRODUCT #00298024
2980A BLT2 COVER, OR EQUAL

AN EQUAL TO THIS STANDARD WILL BE APPROVED ONLY IF THE SAME FUNCTIONALITY AS EONLOCK® IS PROVIDED.

THE
METROPOLITAN SEWER DISTRICT
OF
GREATER CINCINNATI

STANDARD CASTINGS OVER TWO-WAY CLEANOUT

NO SCALE DATE: AUG. 2011

APPROVED: Ralph C. Johnston
SEWERS CHIEF ENGINEER

M.C.

ACC. NO. 61979-A